ViTAM-915BPR(H)

15" IP66 / IP69K Stainless Steel Panel PC

Industrial Panel PC | HMI Controller | Industrial Display Monitor | Box PC

Features

- 15" New Generation Stainless Steel Panel PC
- 8th Gen. Intel Core i3/i5 BGA type Processor
- True Flat Front Bezel Design and Grade 304 Stainless Steel Enclosure (Grade 316 for Option)
- IP66/IP69K Rated with M12 Connectors
- Support Resistive Touch, Projected Capacitive Touch
- Touch on/off Button on the Side Edge for Hygienic Cleaning
- Support Ergonomic Versatile Mounting: Yoke Mounting / Space-saving VESA 75 x 75 mm Mounting

Specifications

System	
CPU	Core i5-8365UE(Quad Core, 6 MB cache, 1.6GHz) Core i3-8145UE(Dual Core, 4 MB cache, 2.2GHz)
System Chipset	SoC
Memory	2 x 260-pin SO-DIMM up to 64GB DDR4 2400MHz
TPM	Firmware TPM (TPM 2.0 compliance)

IO Port	
USB	1 x M12 8-pin for USB 2.0 with waterproof cover and chain
Serial / Parallel	1 x M12 8-pin COM1, RS-232/422/485, default RS-232, with waterproof cover and chain
LAN	1 x M12 8-pin for LAN with waterproof cover and chain
Others	1 x Touch on/off button at the side
Power Connector	1 x M12 3-pin for DC power with waterproof cover and chain 1 x Power switch on the rear
Option	2 x optional blank M12 connector with waterproof cover and chain for selecting two from the following options: 2 x USB 2.0 1 x USB 3.2 Gen.1 1 x LAN 1 x COM 1 x CAN

Storage Space	
HDD	1 x 2.5" SATA3 HDD (for option)
M.2	1 x B-key 2280 (SATA as default, PCI-e select by BIOS) for SSD

Expansion	
Expansion slot	1 x Full size mSATA/mPCIe (mSATA as default, select by BIOS) 1 x NANO-SIM 1 x M.2 E-key 2230 (PCIe+USB) for optional WIFI/BT module
RFID module	RFID module design on the front side (for option)

Display	Standard	High Brightness Optional
Display Type	15" TFT-LCD	15" TFT-LCD
Max. Resolution	1024 x 768	1024 x 768
Max. Color	16.7M	262K / 16.2M (optional)
Luminance (cd/m^2)	300	1000
View Angle	176(H) /176(V)	160(H) /160(V)
Contrast	2000:1	800:1
Backlight Lifetime	70,000 hrs	50,000 hrs

Touch Screen	
Type	Resistive Touch (for BR model) Projected Capacitive (for BP model)
Interface	USB
Light Transmission(%)	Resistive Touch : 80% Projected Capacitive : 90%

Dimensions

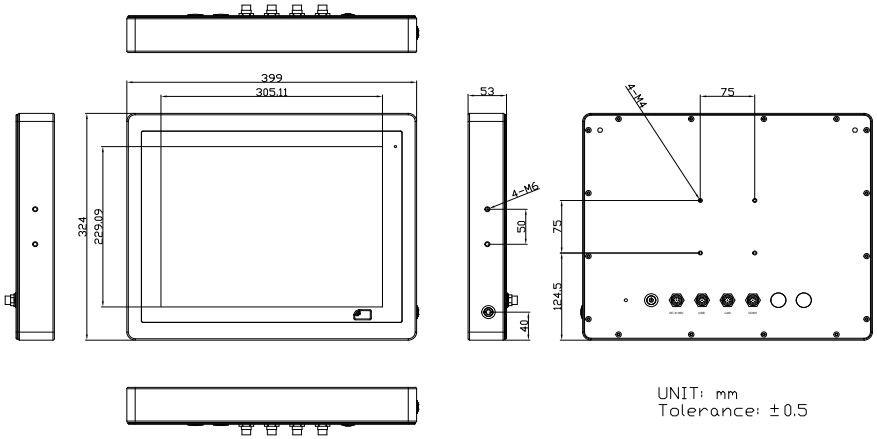

Power	
Power Input	DC 9~36V
Power Consumption	ViTAM-915BP: 35W

Mechanical	
Construction	304 Stainless steel chassis(default), 316 Stainless steel chassis(optional)
Mounting	VESA mount 75 x 75, Yoke mount for optional
IP Rating	Total IP66/IP69K
Dimensions	399 x 324 x 53 mm
Net Weight	6.7 kg

Environmental	
Operating Temperature	0~50°C
Storage Temperature	-30~70°C
Humidity	10 to 95% @ 40°C, non-condensing
Certificate	CE/FCC Class A

Operating System Support
Windows 10 IoT ENT LTSB, Windows 11

Ordering Information	
ViTAM-915BP	15" XGA IP66/IP69K stainless steel panel pc, Intel 8th Gen. Core i Processor, 2 x SO-DIMM DDR4 slots, 128GB TLC SSD, projected capacitive touch, 9~36V DC power input with Adapter
ViTAM-915BR	15" XGA IP66/IP69K stainless steel panel pc, Intel 8th Gen. Core i Processor, 2 x SO-DIMM DDR4 slots, 128GB TLC SSD, 5 wire resistive touch window, 9~36V DC power input with Adapter
ViTAM-915BPH	15" XGA IP66/IP69K stainless steel panel pc, Intel 8th Gen. Core i Processor, 2 x SO-DIMM DDR4 slots, 128GB TLC SSD, projected capacitive touch, 9~36V DC power input with Adapter, 1000 nits
ViTAM-915BRH	15.6" XGA IP66/IP69K stainless steel panel pc, Intel 8th Gen. Core i Processor, 2 x SO-DIMM DDR4 slots, 128GB TLC SSD, 5 wire resistive touch window, 9~36V DC power input with Adapter, 1000 nits

V 1.2

All specifications and photos are subject to change without notice.

All specifications and photos are subject to change without notice.

Assured Systems

Assured Systems is a leading technology company with over 1,500 regular clients in 80 countries, deploying over 85,000 systems to a diverse customer base in 12 years of business. We offer high-quality and innovative rugged computing, display, networking and data collection solutions to the embedded, industrial, and digital-out-of-home market sectors.

US

sales@assured-systems.com

Sales: +1 347 719 4508
Support: +1 347 719 4508

1309 Coffeen Ave
Ste 1200
Sheridan
WY 82801
USA

EMEA

sales@assured-systems.com

Sales: +44 (0)1785 879 050
Support: +44 (0)1785 879 050

Unit A5 Douglas Park
Stone Business Park
Stone
ST15 0YJ
United Kingdom

VAT Number: 120 9546 28
Business Registration Number: 07699660