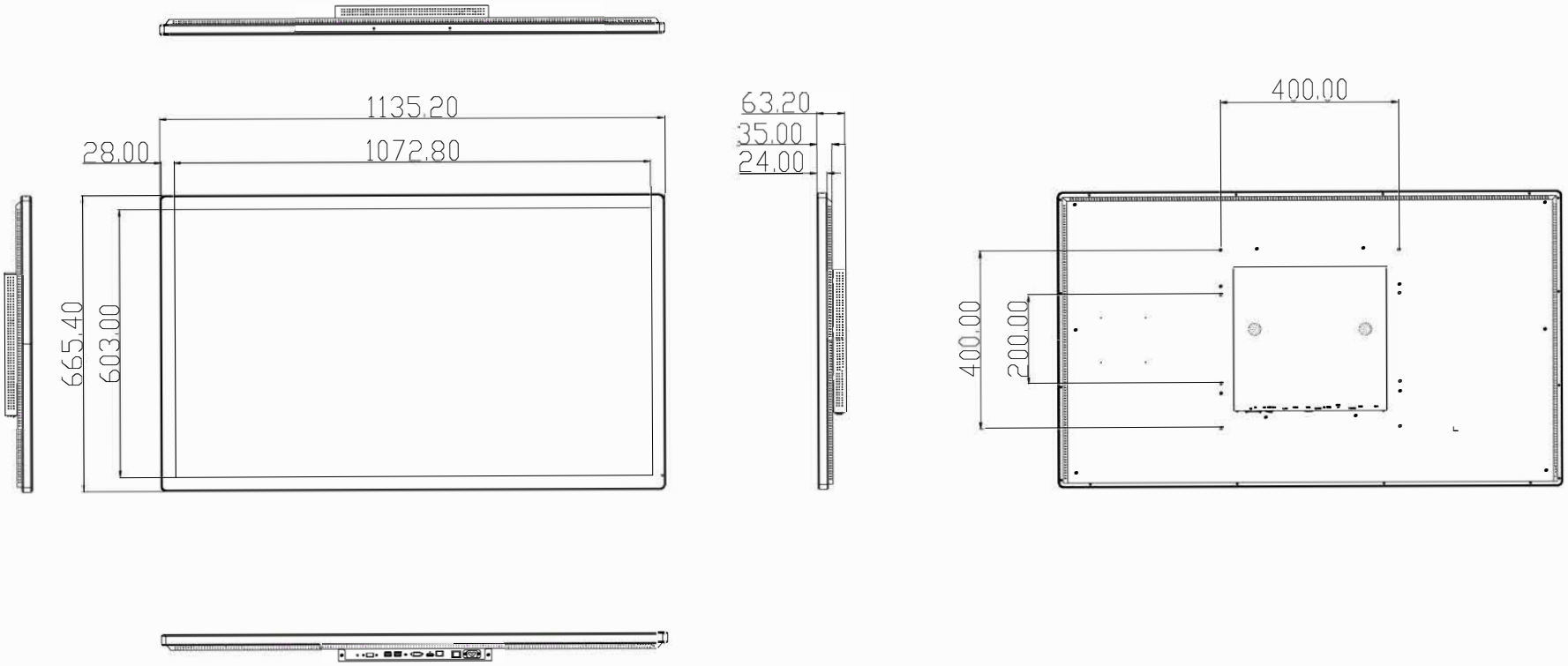

SUREVIEW

U.K. +44 1785 879050 U.S. +1 347 7194508 www.assured-signage.com

ASSURED DIGITAL SIGNAGE

Assured Systems

Assured Systems is a leading technology company with over 1,500 regular clients in 80 countries, deploying over 85,000 systems to a diverse customer base in 12 years of business. We offer high-quality and innovative rugged computing, display, networking and data collection solutions to the embedded, industrial, and digital-out-of-home market sectors.

US

sales@assured-systems.com

Sales: +1 347 719 4508
Support: +1 347 719 4508

1309 Coffeen Ave
Ste 1200
Sheridan
WY 82801
USA

EMEA

sales@assured-systems.com

Sales: +44 (0)1785 879 050
Support: +44 (0)1785 879 050

Unit A5 Douglas Park
Stone Business Park
Stone
ST15 0YJ
United Kingdom

VAT Number: 120 9546 28
Business Registration Number: 07699660