GOT5153W-845

15.6" WXGA TFT Fanless Touch Panel Computer with Intel® Celeron® Processor N3060

Features

- 15.6" WXGA wide screen TFT LCD display with LED backlight
- 15.6" projected capacitive touch or 5-wire flat resistive touch
- Fanless design with Intel® Celeron® processor N3060
- 2.5" SATA HDD or mSATA
- 2 GbE LANs, 4 USB, 2 COM and speakers
- IP65-rated front bezel and IPX1 full enclosure
- Supports wall mount, VESA arm and desktop stand
- Supports RFID (optional)

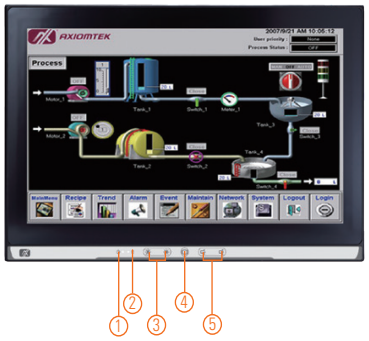

1. Power LED
2. HDD LED
3. Brightness adjust +/-
4. Display on/off
5. Volume adjust

▲ Rear view

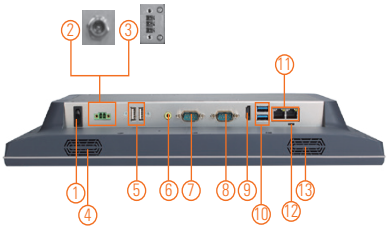

1. Power switch (ATX)
2. Power input connector (screw)
3. Power input connector (phoenix)
4. Speaker
5. 2 x USB 2.0
6. Audio (Line-out)
7. 1 x RS-232/422/485
8. 1 x RS-232
9. 1 x HDMI
10. 2 x USB 3.0
11. 2 x LAN
12. AT/ATX selectable switch
13. Speaker

Introduction

The GOT5153W-845 is a 15.6" fanless touch panel computer. In response to market demand, this panel computer is a cost effective solution. It adopts a modern, sleek and fanless design and is equipped with the Intel® Celeron® processor N3060 up to 2.48 GHz. For wireless network connection, the GOT5153W-845 offers two PCI Express Mini Card slots. By just plugging in a WLAN card, customers can have instant access to wireless LAN/GPRS/GSM/4G environments. Besides, it provides two types of power input. One is DC power input (9 to 36VDC) with terminal block connector, and another is AC power adapter with screw type connector.

Slim & Lightweight Design
The GOT5153W-845 is slim and lightweight which make it fit for limited space installation.

Built-in Internal WLAN Antenna
The GOT5153W-845 provides two PCI Express Mini Card slots and a built-in WLAN antenna for wireless network connections. By simply plugging in the wireless LAN card, customers can use the GOT5153W-845 in wireless LAN/GPRS/GPS/4G environment.

Support Front Membrane Keys (optional)
The GOT5153W-845 has 5 membrane keys on the front panel which allows users to adjust the LCD on/off, LCD brightness and volume setting easily.

Specifications

Front Bezel	IP65, NEMA 4 rugged protection, plastic front bezel	
LCD Panel	Display Type	15.6" WXGA TFT LCD with LED backlight
	Brightness (cd/m^2)	300 nits
	Resolution	1366 x 768
Main System	CPU	Intel® Celeron® processor N3060 2 cores (up to 2.48 GHz)
	System Memory	1 x 204-pin DDR3L-1600 SO-DIMM, up to 8GB
	BIOS	AMI UEFI BIOS
	Storage	1 x 2.5" SATA HDD (9.5 mm height) (AC version only) 1 x mSATA
	Watchdog Timer	255 levels, 0 to 255 sec.
	Onboard Graphics	Integrated Intel® HD GFX

Updated Jan. 29, 2019.
* All specifications and photos are subject to change without notice. www.axiomtek.com
© 2019 Axiomtek Co., Ltd. All rights reserved.

Specifications

I/O Connector	1 x RS-232/422/485 (default RS-232) 1 x RS-232 1 x AT/ATX mode selection switch 1 x Switch for power on/off 2 x USB 2.0 2 x USB 3.0 1 x HDMI 1 x Audio (Line-out) 2 x 10/100/1000 Mbps Ethernet (Intel® i211-AT)
TPM	N/A
Expansion Interface	1 x Full-size PCI Express Mini Card with mSATA 1 x Full-size PCI Express Mini Card with SIM
Touchscreen	Projected capacitive multi-touch 5-wire flat resistive touch
Power Supply	DC version: 9 to 36 VDC with over-current protection fuse AC version: 100 to 240 VAC-DC, 60W power adapter
Power Consumption	30W
Dimensions	394.2 mm (15.53") (W) x 57 mm (2.25") (D) x 257.2 mm (10.13") (H)
Packing Dimensions	510 mm (20.09") x 190 mm (7.48") x 540 mm (21.26")
Weight (net/gross)	3.0 kg (6.61 lb)/4.5 kg (9.92 lb)
Operating Temperature	0°C to +50°C (+32°F to +122°F) with W.T. DRAM/SSD
Relative Humidity	20% to 90% @ 40°C; non-condensing
Operation Vibration	2G, 5 - 500Hz, random for CFast™
Certifications	CE, FCC, UL60950-1

* W.T.: Wide Temperature. All W.T. supported products have to be sorted by Axiomtek.

Packing List

1 x GOT5153W-845
1 x Driver CD
1 x Adapter (GOT5153W-845-J)
1 x Power cord (GOT5153W-845-J)
1 x Phoenix connector (GOT5153W-845 24 VDC)

Ordering Information

Standard	
GOT5153W-845-PCT-J	15.6" WXGA fanless touch panel computer with Intel® Celeron® processor N3060, projected capacitive multi-touch screen and AC-DC 60W power adapter (screw type connector)
GOT5153W-845-FR-J	15.6" WXGA fanless touch panel computer with Intel® Celeron® processor N3060, 5-wire flat resistive touch screen and AC-DC 60W power adapter (screw type connector)
GOT5153W-845-PCT-DC	15.6" WXGA fanless touch panel computer with Intel® Celeron® processor N3060, projected capacitive multi-touch screen and 9 to 36 VDC terminal block connector
GOT5153W-845-FR-DC	15.6" WXGA fanless touch panel computer with Intel® Celeron® processor N3060, 5-wire flat resistive touch screen and 9 to 36 VDC terminal block connector

Optional Accessories

Wi-Fi + Bluetooth kit	
88125120 3A0E	RFID kit
E226171119	Stand kit
82231770050E	Wall mount kit

* Specifications and certifications may vary based on different requirements.

Optional EOS Installation

WES7
WE8S (64-bit)
Windows® 10 IoT Enterprise (64bit)

Optional OS Installation

Windows® 7
Windows® 8.1 (64-bit)
Windows® 10

Dimensions

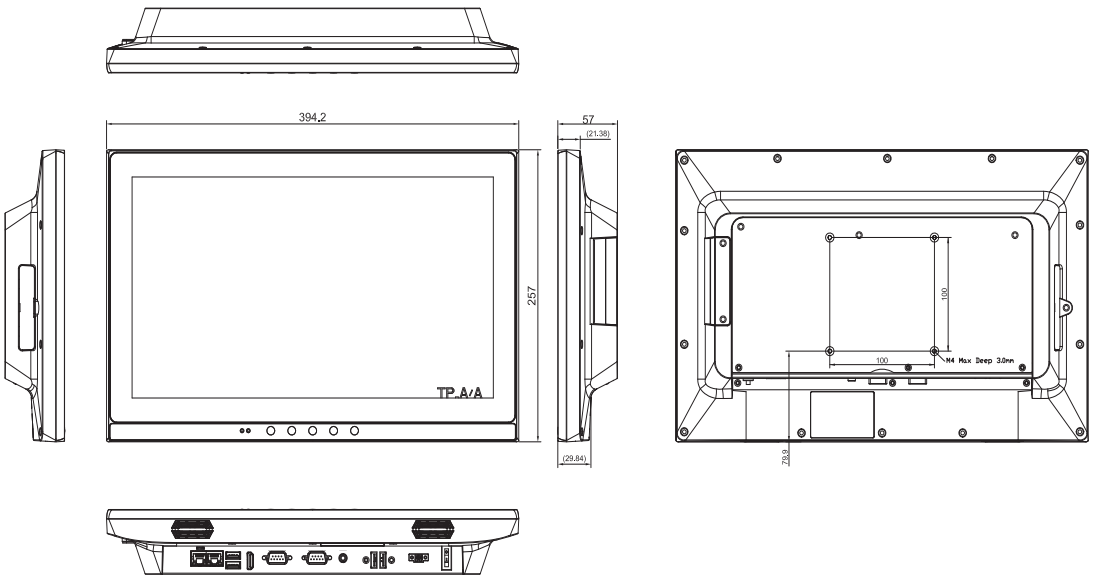

* All specifications and photos are subject to change without notice. www.axiomtek.com © 2019 Axiomtek Co., Ltd. All rights reserved.

Assured Systems

Assured Systems is a leading technology company with over 1,500 regular clients in 80 countries, deploying over 85,000 systems to a diverse customer base in 12 years of business. We offer high-quality and innovative rugged computing, display, networking and data collection solutions to the embedded, industrial, and digital-out-of-home market sectors.

US

sales@assured-systems.com

Sales: +1 347 719 4508
Support: +1 347 719 4508

1309 Coffeen Ave
Ste 1200
Sheridan
WY 82801
USA

EMEA

sales@assured-systems.com

Sales: +44 (0)1785 879 050
Support: +44 (0)1785 879 050

Unit A5 Douglas Park
Stone Business Park
Stone
ST15 0YJ
United Kingdom

VAT Number: 120 9546 28
Business Registration Number: 07699660